K34 Series KEYBOARD TRACKERBALL

Technical Drawings

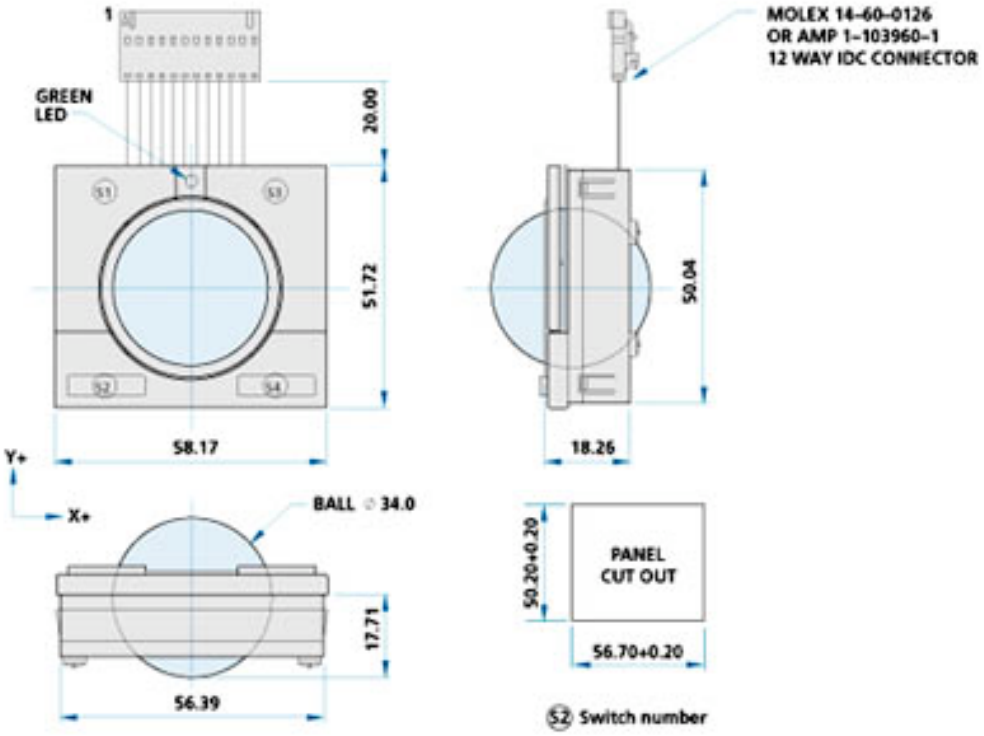

Cursor Controls Ltd, Conroi House, Brunel Drive, Newark, Nottinghamshire, U.K .
Tel: +44 (0)1636 615600 Fax: +44 (0)1636 615601 Website www.cursorcontrols.com E-mail: sales@cursorcontrols.com