R60 Series PROTRACK DESKTOP TRACKERBALL

Technical Drawings

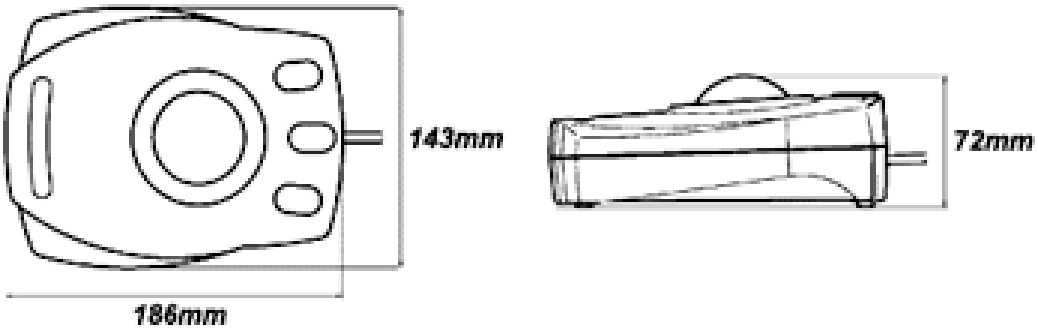

Trackerball ProTrack60

Tested To Comply
With FCC Standards

FOR HOME OR OFFICE USE

This product conforms to the requirements of the European Council Directive 89/336/EEC on the approximation of laws of the member states relating to Electromagnetic Compatibility and Safety.

Cursor Controls Ltd, Conroi House, Brunel Drive, Newark, Nottinghamshire, U.K .
Tel: +44 (0)1636 615600 Fax: +44 (0)1636 615601 Website www.cursorcontrols.com E-mail: sales@cursorcontrols.com